A Space-Frequency Parallel ICI Cancellation Technique for OFDM Systems

Hen-Geul Yeh, *Senior Member, IEEE*

***Abstract*—Orthogonal frequency division multiplexing (OFDM) systems work well if the subcarriers are orthogonal to each other. However, the orthogonality among subcarriers may not exist and result in inter-carrier interference (ICI) at the receiver. This may cause by residual carrier frequency offset, time variations due to Doppler shift or phase noise. Further developing the parallel cancellation (PC) scheme to mitigate the ICI of OFDM systems, we expand this OFDM symbol-based PC scheme into a space-frequency (SF) coded system. This new simple space- frequency parallel cancellation (SFPC) scheme is a technique that combines the SF and PC schemes together. Computer simulations indicate that OFDM systems using the SFPC scheme outperform the regular PC and SF systems in slow and fast frequency selective fading channels, specifically at a high signal-noise-ratio (SNR). Furthermore, the error floor of the SFPC-OFDM system is significantly lower than that of the PC and SF systems without increasing computational load. Additionally, the SFPC scheme is a simple multiple input and multiple output (MIMO) system.**

***Index Terms*-Inter-Carrier Interference, Space-frequency, OFDM**

I. Introduction

LATELY, orthogonal Frequency Division Multiplexing (OFDM) has become a key scheme for bandwidth efficient modulation technology and high data rate wireless applications. It is also known as multicarrier modulation (MCM), incorporates a large number of orthogonal subcarriers to transmit data stream in parallel in the frequency domain. However, the factors such as carrier frequency offset, due to Doppler shift or phase noise lead to a loss in the orthogonality between subcarriers and results in inter-carrier interference (ICI) which degrades the bit error rate (BER) performance of OFDM systems significantly. Many ICI mitigation schemes such as ICI self-cancellation (SC), frequency-domain equalization, and the parallel cancellation (PC) scheme have been proposed [1-5]. The SC method in [1] applies the repetitive transmission in a per-subcarrier basis, while the parallel cancellation (PC) [2, 5] applies the repetitive transmission in a per-OFDM symbol basis.

Additional developing the idea of the PC scheme to mitigate the ICI of OFDM systems, we expand this PC scheme into a space-frequency (SF) coded system [6-9] and form a simple SFPC-OFDM system. Since the PC scheme is robust to block size, the SFPC scheme is also robust to block size. Moreover, the PC scheme provides a much higher signal-to-ICI ratio (SICIR) than does the regular OFDM system when Doppler shift or residual carrier frequency offset (CFO) exists. Hence the PC scheme lowers error floor for OFDM systems in frequency selective fading channels with Doppler frequency. This characteristic is inherently extended to the SFPC-OFDM system and improves the BER significantly. We focus on the architecture and BER performance comparison of three PC-, SF- and SFPC- OFDM systems via simulations in frequency selective fading channels. The scheme is simple, back compatible with the existing OFDM system, low complexity with two-branch diversity, and can be combined with other techniques, such as channel coding schemes to further improve diversity gain and coding gain in multiple input and multiple output (MIMO) systems.

This paper is organized as follows. The OFDM system is discussed in Section II. Section III briefs the PC scheme. Section IV shows the SF-OFDM system. Section V presents the SFPC scheme. Section VI provides simulation results. Conclusions are presented in Section VII.

II. The Regular OFDM System

The baseband transmitted signal x_k after IFFT is

$$x_k = \sum_{n=0}^{N-1} d_n e^{j\frac{2\pi}{N}kn} \qquad k = 0,1,2,...,N-1 \tag{2.1}$$

where d_n is the data symbol, and $e^{j\frac{2\pi}{N}kn}$, $k = 0,1,...,N-1$ represents the corresponding orthogonal frequencies of N subcarriers. After adding the cyclic prefix (CP) with a length G to the signal and a parallel to serial (P/S) conversion, the signal transmitted is $\boldsymbol{x}^g = [x_{N-G} \ldots x_{N-1}\, x_0 \ldots x_{N-1}]^T$. The received signal is the convolution of $\boldsymbol{x}^g$ and the channel impulse response $\boldsymbol{h}$. This signal is mixed with a local oscillator signal, which is ε above the correct carrier frequency with phase offset, plus the additive white Gaussian noise (AWGN). At the receiver, CP removal (CPR) and serial to parallel (S/P) are performed first. The baseband recovered signal after FFT is

$$\begin{aligned}\hat{d}_m &= \frac{1}{N}\sum_{k=0}^{N-1} r_k e^{-j\frac{2\pi mk}{N}} \\ &= \frac{1}{N}\sum_{n=0}^{N-1}\sum_{k=0}^{N-1} H_n d_n e^{j\frac{2\pi(n+\varepsilon)k}{N}} e^{-j\frac{2\pi mk}{N}} \\ &= H_0 d_m u_0 + \sum_{n=0, n\neq m}^{N-1} H_n d_n u_{n-m} \qquad m = 0,\ldots\end{aligned} \tag{2.2}$$

978-1-4799-5927-3/15/$31.00 ©2015 IEEE

where

$$u_{n-m} = \left. \frac{e^{j\pi\frac{N-1}{N}(n-m+\varepsilon)} \sin\left[\pi\left(n-m+\varepsilon\right)\right]}{N \cdot \sin\left[\left(\pi/N\right)\cdot\left(n-m+\varepsilon\right)\right]} \right|_{(n-m)\bmod N} . \qquad (2.3)$$

Without a loss of generality, both the AWGN and phase offset are set to zero in (2.2) and throughout this paper for simplicity. In (2.2), r_k is the received signal to the FFT; k is the sampling index; $e^{j\frac{2\pi}{N}k\varepsilon}, k = 0,1,\ldots,N-1$, represents the frequency offset of the received signal at the sampling instants; ε is the frequency offset normalized to the subcarrier frequency spacing; m is the receiver subcarrier index; H_n is the n-th element of the N-point FFT of the channel impulse response $\boldsymbol{h} = [h_0 \ldots h_k \ldots h_L \ 0 \ldots 0]^T$ with N-L-1 padding zeros; and u_{n-m} is the weighting factor on the data symbol. Note that the signal is transmitted through a fading channel of order L, i.e., the channel impulse response $h_k = 0$ for $k > L$. To avoid inter-symbol interference (ISI), the guard interval must be chosen to satisfy $G \geq L$. A well known property of the FFT is that the cyclic convolution in the time domain results in multiplication in the frequency domain. Therefore, OFDM with a cyclic prefix transforms a frequency selective fading channel into N flat fading channels as shown in (2.2). For simplicity, slow fading channels with a constant mean of H_n are assumed. The averaged weighting function u_{n-m} is plotted in Fig. 1 as a function of the normalized frequency of N=8. At ε =0, all weighting factors for d_m, m=1 to 7, are zeros except that the real part of u_0 equals one. This means it holds the *orthogonality* and has no crosstalk among subcarriers. When ε >0, the curve of the weight function of Fig. 1 shifts to the left and causes a loss of the subcarriers' *orthogonality*. Weights on data symbols are non-zero valued and ICI occurs. To mitigate ICI, a PC scheme is developed in [2]. The basic idea is to have a 2nd path that provides the curve of weighting factors with a right shift when ε >0. By combining these two-path data at the receiver, it shows that the ICI will be significantly reduced due to the opposite polarity of the weighting function at all data except the desired data as shown in next section.

III. THE PC SCHEME

The PC-OFDM scheme [2] has a two-branch operation as depicted in Fig. 2. The upper branch is a regular OFDM system which has an IFFT processing at the transmitter and FFT processing at the receiver as described in Section II.

At the transmitter, the lower branch requires a FFT operation as defined in (3.1):

$$x_k^{'} = \sum_{n=0}^{N-1} d_n e^{-j\frac{2\pi}{N}kn} \quad k = 0,1,2,\ldots,N-1 . \qquad (3.1)$$

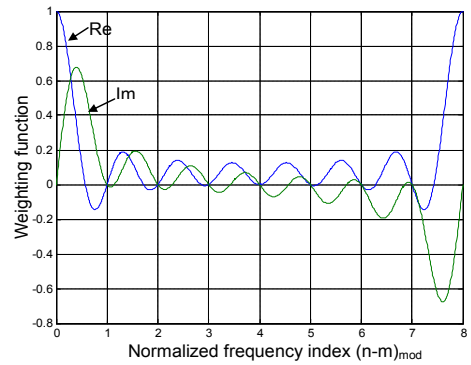

Fig. 1. Weighting function of data symbols in the regular OFDM.

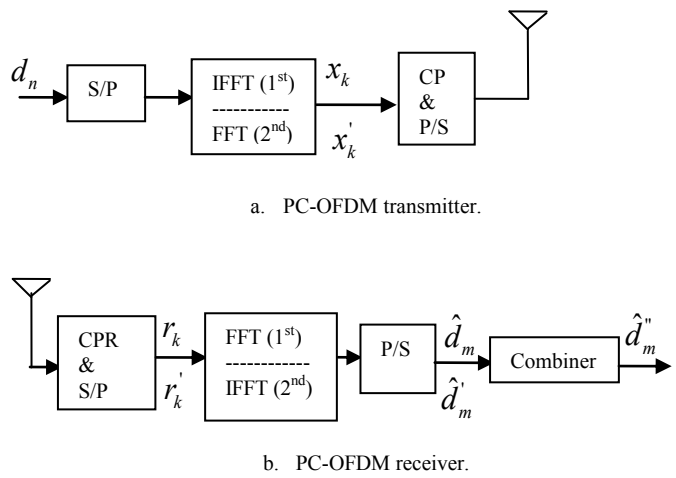

a. PC-OFDM transmitter.

b. PC-OFDM receiver.

Fig. 2. The architecture of a simplified PC-OFDM baseband transceiver.

At the receiver, the lower branch requires an IFFT as follows.

$$\begin{aligned} \hat{d}_m^{'} &= \frac{1}{N}\sum_{k=0}^{N-1} r_k^{'} e^{j\frac{2\pi mk}{N}} \\ &= \frac{1}{N}\sum_{n=0}^{N-1}\sum_{k=0}^{N-1} d_n H_n^{'} e^{j\frac{2\pi(-n+\varepsilon)k}{N}} e^{j\frac{2\pi mk}{N}} \qquad (3.2) \\ &= H_m^{'} v_0 d_m + \sum_{n=0, n\neq m}^{N-1} H_n^{'} v_{n-m} d_n \qquad m = 0,\ldots \end{aligned}$$

where

$$v_{n-m} = \left. \frac{e^{j\pi\frac{N-1}{N}(m-n+\varepsilon)} \sin\left[\pi\left(m-n+\varepsilon\right)\right]}{N \cdot \sin\left[\left(\pi/N\right)\cdot\left(m-n+\varepsilon\right)\right]} \right|_{(n-m)\bmod N} . \qquad (3.3)$$

Note $r_k^{'}$ represents the 2nd received signal, and $\hat{d}_m^{'}$ is the output of the IFFT. Again, m is the receiver subcarrier index, $H_n^{'}$ is the nth element of the N-point IFFT of the 2nd branch channel impulse response $\boldsymbol{h}^{'} = [h_0^{'} \ldots h_k^{'} \ldots h_{L^{'}}^{'} \ 0 \ldots 0]^T$ with $N - L^{'} - 1$ padding zeros, and v_{n-m} is the weighting factor on

the data symbol. Note that v_{n-m} is similar to u_{n-m} but the sign of (n-m) is swapped.

Assuming that both 1st and 2nd branches are combined coherently without interfering with each other by using a division multiplexing technique, such as frequency division multiplexing (FDM), or time division multiplexing (TDM), or code division multiplexing (CDM), the final detected symbol is the sum detected symbols as follows:

$$\begin{aligned}\hat{d}_m'' &= \hat{d}_m + \hat{d}_m' \\ &= (H_m u_0 + H_m' v_0) d_m + \sum_{n=0,\, n\neq m}^{N-1} (H_n u_{n-m} + H_n' v_{n-m}) d_n\end{aligned} \tag{3.4}$$

The first term in (3.4) is the desired signal component and the 2nd term represents the ICI term. Fig. 3 depicts the combined weights $|u_n + v_n|$ with N=16 and $\varepsilon = 0.2$. It shows that ICI terms of the regular OFDM system are higher than that of the corresponding PC-OFDM systems.

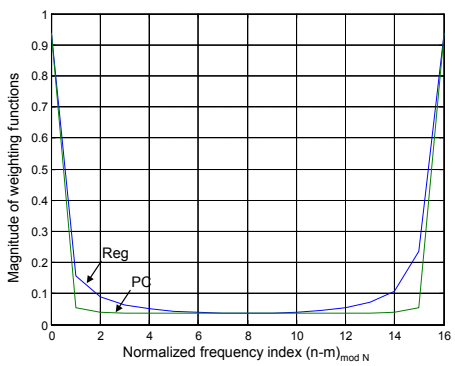

Fig. 3. The magnitude of weighting factors of the regular and PC systems.

IV. The SF-OFDM Transmission System

The SF-OFDM [7] is a SF transmitter diversity technique in a per-OFDM symbol basis as depicted in Fig. 4. At the transmitter, $\boldsymbol{d} = [d_0\ d_1\ \ldots\ d_{N-2}\ d_{N-1}]^T$ is the input vector. In this [2x1] system, two length N blocks are formed via SF coding as two parallel input data vectors for upper and lower branches as follows:

$$\begin{aligned}\boldsymbol{d_1} &= [d_0\ \ -d_1^*\ \ldots\ d_{N-2}\ \ -d_{N-1}^*]^T, \\ \boldsymbol{d_2} &= [d_1\ \ d_0^*\ \ldots\ d_{N-1}\ \ d_{N-2}^*]^T.\end{aligned} \tag{4.1}$$

Furthermore, two length $N/2$ even and odd polyphase component vectors of $\boldsymbol{d}$ are defined as follows:

$$\begin{aligned}\boldsymbol{d_e} &= [d_0\ \ d_2\ \ldots\ d_{N-4}\ \ d_{N-2}]^T, \\ \boldsymbol{d_o} &= [d_1\ \ d_3\ \ldots\ d_{N-3}\ \ d_{N-1}]^T.\end{aligned} \tag{4.2}$$

Hence $\boldsymbol{d_1}$ and $\boldsymbol{d_2}$ can be expressed as the corresponding even and odd polyphase component vectors as follows:

$$\begin{aligned}\boldsymbol{d_{1e}} &= \boldsymbol{d_e}, \boldsymbol{d_{1o}} = -\boldsymbol{d_o^*} \\ \boldsymbol{d_{2e}} &= \boldsymbol{d_o}, \boldsymbol{d_{2o}} = \boldsymbol{d_e^*}.\end{aligned} \tag{4.3}$$

At time t, $\boldsymbol{d_1}$ and $\boldsymbol{d_2}$, are sent to two parallel IFFTs and transmitted with CP via transmit antennas Tx1 and Tx2, respectively, as depicted in Fig. 4. At the receiver, it needs to perform operations--for example, the de-multiplexing (DeMux) or filtering process--to separate these two-branch signals first. After CPR, the two received signal vectors $\boldsymbol{y}_1$ and $\boldsymbol{y_2}$ at time t after FFT are combined as

$$\boldsymbol{y} = \boldsymbol{y}_1 + \boldsymbol{y_2} = \boldsymbol{H}_1 \boldsymbol{d_1} + \boldsymbol{H}_2 \boldsymbol{d_2}. \tag{4.4}$$

Equivalently, the even and odd vectors of $\boldsymbol{y}$ are

$$\begin{aligned}\boldsymbol{y}_e &= \boldsymbol{H}_{1e}\boldsymbol{d_{1e}} + \boldsymbol{H}_{2e}\boldsymbol{d_{2e}} = \boldsymbol{H}_{1e}\boldsymbol{d_e} + \boldsymbol{H}_{2e}\boldsymbol{d_o}, \\ \boldsymbol{y}_o &= \boldsymbol{H}_{1o}\boldsymbol{d_{1o}} + \boldsymbol{H}_{2o}\boldsymbol{d_{2o}} = -\boldsymbol{H}_{1o}\boldsymbol{d_o^*} + \boldsymbol{H}_{2o}\boldsymbol{d_e^*}.\end{aligned} \tag{4.5}$$

where $\boldsymbol{H}_1$ and $\boldsymbol{H}_2$ are two diagonal matrices whose diagonal elements are FFTs of respective channel impulse responses, $\boldsymbol{h}_1$ and $\boldsymbol{h}_2$ for the transmit antenna Tx1 and Tx2, respectively. Similarly, $\boldsymbol{H}_1$ and $\boldsymbol{H}_2$ can also be expressed as the corresponding even and odd matrices as $\boldsymbol{H}_{1e}$ and $\boldsymbol{H}_{1o}$, and $\boldsymbol{H}_{2e}$ and $\boldsymbol{H}_{2o}$, respectively.

Assuming that channel responses are known or can be estimated at the receiver and fading is constant across two adjacent subcarriers or $\boldsymbol{H}_{1e} = \boldsymbol{H}_{1o}$ and $\boldsymbol{H}_{2e} = \boldsymbol{H}_{2o}$, the decision variables are obtained as follows:

$$\begin{aligned}\hat{\boldsymbol{d}}_{\boldsymbol{e}} &= \boldsymbol{H}_{1e}^*\boldsymbol{y}_e + \boldsymbol{H}_{2o}\boldsymbol{y}_o^* = (|\boldsymbol{H}_{1e}|^2 + |\boldsymbol{H}_{2o}|^2)\boldsymbol{d_e}, \\ \hat{\boldsymbol{d}}_{\boldsymbol{o}} &= \boldsymbol{H}_{2e}^*\boldsymbol{y}_e - \boldsymbol{H}_{1o}\boldsymbol{y}_o^* = (|\boldsymbol{H}_{2e}|^2 + |\boldsymbol{H}_{1o}|^2)\boldsymbol{d_o}.\end{aligned} \tag{4.6}$$

The estimate vector $\hat{\boldsymbol{d}}$ is obtained by combining $\hat{\boldsymbol{d}}_e$ and $\hat{\boldsymbol{d}}_o$.

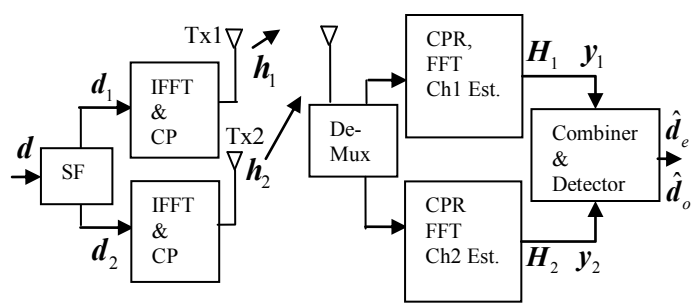

Fig. 4. Block diagram of the regular SF-OFDM transceiver.

V. The New SFPC-OFDM Scheme

Since both the SF-OFDM and PC are techniques in a per-OFDM symbol basis, they can be integrated naturally. Fig. 5 depicts a simplified block diagram of the novel SFPC-OFDM transceiver. At the transmitter, two length N vectors are formed as input data vectors as defined in (4.1). At time t, $\boldsymbol{d}_1$

and $\boldsymbol{d}_2$ are sent to two parallel branches for upper IFFT and lower FFT, respectively. At the receiver, it performs DeMux to separate these two-branch signals first. After CPR, the upper branch employs a FFT for demodulating the received signal from Tx1 while the lower branch employs an IFFT operator for demodulating the received signal from Tx2. The received two signal vectors are

$$\boldsymbol{y}_1 = \boldsymbol{H}_1\boldsymbol{d}_1 \text{ and } \boldsymbol{y}_2 = \bar{\boldsymbol{H}}_2\boldsymbol{d}_2 \tag{5.1}$$

where $\bar{\boldsymbol{H}}_2$ is a diagonal matrix whose diagonal elements are the N-point IFFT of the channel impulse response $\boldsymbol{h}_2$. Results of the FFT of the received signal $\boldsymbol{r}_2$ at the lower branch is

$$\begin{aligned}\boldsymbol{y}_2 &= FFT[(\boldsymbol{r}_2)] \\ &= FFT\{[\boldsymbol{h}_2 \otimes (IFFT(\boldsymbol{d}_2))]\} \\ &= FFT[\boldsymbol{h}_2]\boldsymbol{d}_2 = \bar{\boldsymbol{H}}_2\boldsymbol{d}_2.\end{aligned} \tag{5.2}$$

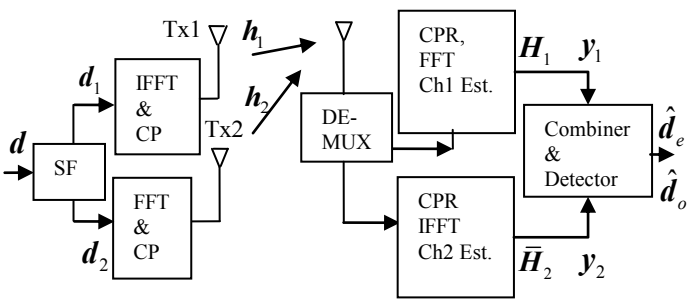

Fig. 5. Block diagram of the SFPC-OFDM transceiver.

Similarly, $\bar{\boldsymbol{H}}_2$ can also be expressed as the corresponding even and odd matrices as, $\bar{\boldsymbol{H}}_{2e}$ and $\bar{\boldsymbol{H}}_{2o}$. The two received signal vectors $\boldsymbol{y}_1$ and $\boldsymbol{y}_2$ are combined as

$$\boldsymbol{y} = \boldsymbol{y}_1 + \boldsymbol{y}_2 = \boldsymbol{H}_1\boldsymbol{d}_1 + \bar{\boldsymbol{H}}_2\boldsymbol{d}_2. \tag{5.3}$$

Equivalently, the even and odd vectors of $\boldsymbol{y}$ are

$$\begin{aligned}\boldsymbol{y}_e &= \boldsymbol{H}_{1e}\boldsymbol{d}_{1e} + \bar{\boldsymbol{H}}_{2e}\boldsymbol{d}_{2e} = \boldsymbol{H}_{1e}\boldsymbol{d}_e + \bar{\boldsymbol{H}}_{2e}\boldsymbol{d}_o, \\ \boldsymbol{y}_o &= \boldsymbol{H}_{1o}\boldsymbol{d}_{1o} + \bar{\boldsymbol{H}}_{2o}\boldsymbol{d}_{2o} = -\boldsymbol{H}_{1o}\boldsymbol{d}_o^* + \bar{\boldsymbol{H}}_{2o}\boldsymbol{d}_e^*.\end{aligned} \tag{5.4}$$

Again, assuming that channel responses are known or can be estimated at the receiver and fading is constant across two adjacent subcarriers or $\boldsymbol{H}_{1e} = \boldsymbol{H}_{1o}$ and $\bar{\boldsymbol{H}}_{2e} = \bar{\boldsymbol{H}}_{2o}$, the decision variables are obtained as follows:

$$\begin{aligned}\hat{\boldsymbol{d}}_e &= \boldsymbol{H}_{1e}^*\boldsymbol{y}_e + \bar{\boldsymbol{H}}_{2o}\boldsymbol{y}_o^* = (|\boldsymbol{H}_{1e}|^2 + |\bar{\boldsymbol{H}}_{2o}|^2)\boldsymbol{d}_e, \\ \hat{\boldsymbol{d}}_o &= \bar{\boldsymbol{H}}_{2e}^*\boldsymbol{y}_e - \boldsymbol{H}_{1o}\boldsymbol{y}_o^* = (|\bar{\boldsymbol{H}}_{2e}|^2 + |\boldsymbol{H}_{1o}|^2)\boldsymbol{d}_o.\end{aligned} \tag{5.5}$$

The estimate vector $\hat{\boldsymbol{d}}$ is obtained by combining $\hat{\boldsymbol{d}}_e$ and $\hat{\boldsymbol{d}}_o$.

VI. Simulation Results

The bit error rate (BER) performance of the PC-, SF-, and SFPC- OFDM schemes has been assessed by simulations. The COST207 4-ray rural area (RA), 6-ray typical urban (TU) and bad urban (BU) channels are employed. These slow (RA and TU) and fast (BU) frequency selective mobile channel parameters are applied with QPSK at a rate of 2^{20} symbols/second and a sampling period of T_s=2^{-20} sec. Cyclic prefix length is set to a quarter the OFDM block size.

Case I: SF and SFPC in RA channels

Both the SF and SFPC schemes are compared with three different OFDM block size, N=256, 512, and 1024. It is assumed that the channel responses, $\boldsymbol{h}_1$ and $\boldsymbol{h}_2$, are independent. They are known or estimated accurately at the receiver, and the corresponding complex channel gain remains constant between adjacent subcarriers in one OFDM symbol. Fig. 6 shows the average BER comparison with the maximum Doppler frequency , f_D, equal to 100 Hz. Note f_D to subcarrier frequency spacing ratio (i.e. $\varepsilon_D = f_D N T_s$) ranges from 0.0244 ($N$=256) to 0.0977 ($N$=1024). The SFPC scheme outperforms the SF scheme in all cases. Without the PC based ICI cancellation, the SF scheme has a higher error floor when E_b/N_o > 15 dB.

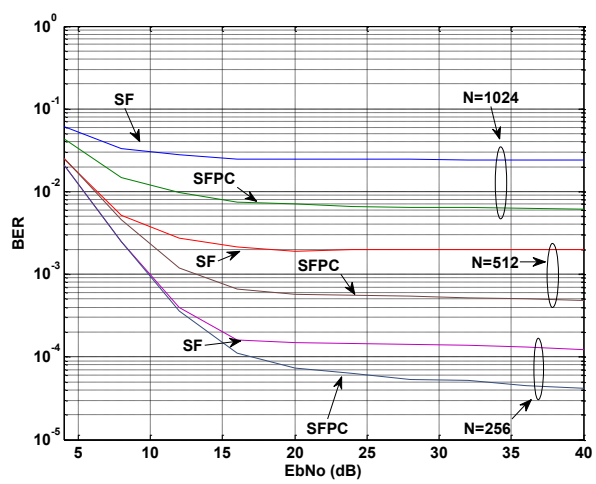

Fig. 6. The BER comparison of SF- and SFPC- OFDM schemes with different block sizes over the RA channel. The maximum Doppler frequency is 100 Hz.

Case II: PC, SF and SFPC Schemes in TU channels

PC-, SF-, and SFPC- OFDM systems are all two-branch systems. It is assumed that the channel responses, $\boldsymbol{h}_1$ and $\boldsymbol{h}_2$, are known at the receiver and remain constant for two adjacent subcarriers. The maximum Doppler spread, f_D, to subcarrier frequency spacing ratio is chosen as 0.0244 (f_D =50 Hz) and 0.0488 (f_D =100 Hz) in TU channel parameters with a fixed OFDM block size N = 512. As depicted in Fig. 7, the BER of the SFPC scheme outperforms that of the PC and SF schemes, while the BER of the SF scheme is better than that of the PC scheme. The lower f_D, the better BER performance of all

three schemes is achieved. The BER curve of all three schemes starts to exhibit an error floor due to ICI, when $E_b/N_o > 25$ dB.

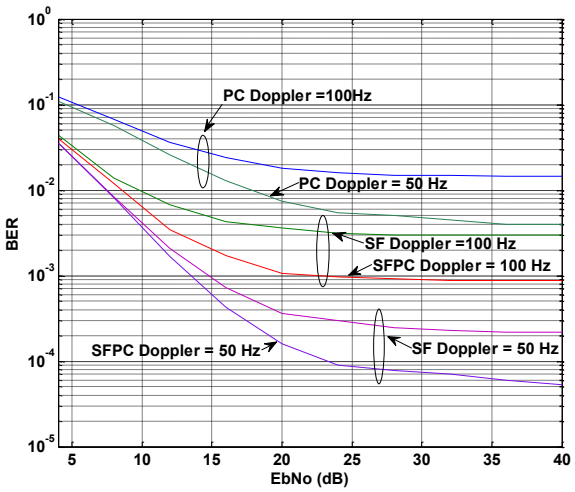

Fig. 7. The BER comparison of PC-, SF-, and SFPC- OFDM systems in the TU channel.

Case III: SF and SFPC in BU channels

Fig. 8 shows the average BER performance of SF- and SFPC- OFDM schemes with f_D = 100 Hz and N range from 128 to 512 (i.e. ε_D =0.0122 to 0.0488) in the BU with known channel impulse responses at the receiver. The BER performance of the SFPC scheme outperforms the corresponding SF scheme regardless N, the size of the OFDM block, in this fast fading channels, specifically for N=128. Moreover, rhe error floor of both the SFPC and SF schemes degrades as ε_D increases.

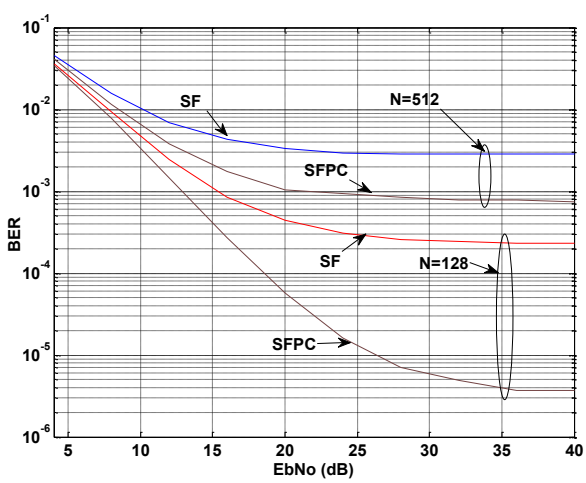

Fig. 8. The BER comparison of the SF- and SFPC- OFDM schemes with maximum Doppler frequency = 100 Hz in BU area.

The above results demonstrate that the proposed SFPC-OFDM scheme works well not only in slow fading channels but also in time-varying fast frequency selective fading scenarios. Although an analytical expression for choosing the OFDM block size is not available, simulation results do provide a suggestion. For the symbol rate and channel characteristics used in the simulations for this study, a moderate block size range from 128 to 512 is good selection.

VII. Conclusion

This paper reviews a PC scheme for combating the impact of ICI on OFDM systems. The PC scheme, which has been studied theoretically and by simulations, provides a significant SICIR improvement over the SC scheme in small ε. Furthermore, we expand this PC scheme into a SF system and form a new SFPC-OFDM scheme. By keeping useful properties of both the SF (robust to OFDM symbol size) and PC (ICI cancellation) schemes, the SFPC outperforms regular SF-OFDM and PC-OFDM systems in mobile channels without increasing system complexity. This SFPC-OFDM has a significantly lower error floor due to the ICI parallel cancelling scheme in both slow and fast frequency selective fading channels. Although only a [2x1] transmitter diversity scheme is presented, it can be applied to other MIMO systems, such as a [2x2] system, and multiple input single output (MISO), such as a [4x1]. Since this SFPC is very simple, it may serve as the enhanced function with almost no additional cost in hardware and software when it is combined with other channel coding scheme to mitigate ICI and improve BER performance in mobile channels with residual frequency offset, timing offset, or Doppler velocity.

References

[1] Y. Zhao and S-G. Haggman, "Intercarrier interference self-cancellation scheme for OFDM mobile communication systems," *IEEE Trans. Commun.,* vol. 49, no. 7, July 2001, pp. 1185-1191.

[2] H. G. Yeh and C. C. Wang, "New parallel algorithm for mitigating the frequency offset of OFDM systems," *Proc. IEEE VTC* Fall 2004, Sept. L.A., pp. 2087-2091.

[3] Y. Yu, S.-H Leung, and F. Lu, "Iterative frequency domain equalization for OFDM over doubly selective channels," in *Proc. ICASSP*, vol 3, Honolulu, Hawaii, USA, April 2007, pp. 453-456.

[4] A. S. and G. S., "General ICI Self-Cancellation scheme for OFDM systems," *IEEE Trans. on Veh. Technol.*, vol. 54, no. 1, Jan. 2005, pp.198 – 210.

[5] H. G. Yeh and K. Yao, "A Parallel ICI Cancellation Technique for OFDM Systems," in *Proc. of 2012 IEEE GlobeCom,* pp. 3703-3708, Anaheim, CA, Dec. 2012.

[6] S. M. Alamouti, "A simple transmit diversity technique for wireless communications," *IEEE Journal on Select Areas in Commun.,* vol. 16, no. 8, Oct. 1998, pp. 1451-1458.

[7] K. F. Lee and D. B. Williams, "A space-frequency transmitter diversity technique for OFDM systems," in *Proc. IEEE GLOBECOM*, San Francisco, CA, USA, Dec. 2000, pp. 1473-1477.

[8] Z. Li and X.-G. Xia, "An Alamouti Coded OFDM Transmission for Cooperative Systems Robust to Both Timing Errors and Frequency offsets," *IEEE Trans. on Wireless Commun*, vol. 7, no. 5, May 2008,pp. 1839 - 1844.

[9] S. K. S. Yusof and A. I. A. Zamani, "Intercarrier Interference Self-Cancellation for Space-Time-Frequency MIMO-OFDM System," in *Proc. IEEE Intern. RF and Microwave Conf.*, Dec., 2008, Kuala Lumpur, Malasia, pp. 520-523.